

User's Manual
Scan or Click

## Features :

- Various output configuration is selectable
- Built in active PFC, PF>0.95
- Universal AC input/ full range
- Remote Control on every individual output module
- Remote Sense on every single output module(MS-75,150,210,300,360)
- Remote margin / V-Program(MS-210/360)
- Built in parallel function(MS-210/300/360)
- Protections: Short circuit / Overload / Over voltage for all output modules
- Additional 12V/0.1A auxiliary output for remote control
- Cooling by built-in DC fan with fan alarm function
- 3 years warranty

## GTIN CODE

MW Search: https://www.meanwell.com/serviceGTIN.aspx

UL62368-1 BS EN/EN62368-1 TPTC004 IEC62368-1

### Output Configuration Guide

MP □□□-□□□□□□□-□

SLOT1 SLOT2 SLOT3 SLOT4 SLOT5 SLOT6 SLOT7

450/650/1K0(450W/650W/1000W)

Modular Power with PFC

※450W/650W(5SLOT)
※1000W(7SLOT)

Parallel or option code (See Table 1.)

**Example: MP1K0-1C 2 E # S 2 K**

SLOT1 O/P:5V@35A

SLOT2,3 O/P:12V@25A

SLOT4 Blank Slot

SLOT5 O/P:5V@10A 12V@4.2A

SLOT6,7 O/P:48V@6.3A

Single output(MS-150) 1 SLOT (150W max.)

| Voltage code | Voltage |
|---|---|
| A | 2V |
| B | 3.3V |
| C | 5V |
| D | 7.5V |
| E | 12V |
| F | 15V |
| G | 18V |
| H | 24V |
| I | 27V |
| J | 33V |
| K | 48V |

Single output(MS-210) 1 SLOT (210W max.)

| Voltage code | Voltage |
|---|---|
| 1A | 2V |
| 1B | 3.3V |
| 1C | 5V |
| 1D | 7.5V |
| 1E | 12V |
| 1F | 15V |
| 1G | 18V |
| 1H | 24V |
| 1I | 27V |
| 1J | 33V |
| 1K | 48V |

Single output(MS-300) 2 SLOT (300W max.)

| Voltage code | Voltage |
|---|---|
| 2A | 2V |
| 2B | 3.3V |
| 2C | 5V |
| 2D | 7.5V |
| 2E | 12V |
| 2F | 15V |
| 2G | 18V |
| 2H | 24V |
| 2I | 27V |
| 2J | 33V |
| 2K | 48V |

Single output(MS-360) 2 SLOT (360W max.)

| Voltage code | Voltage |
|---|---|
| 3A | 2V |
| 3B | 3.3V |
| 3C | 5V |
| 3D | 7.5V |
| 3E | 12V |
| 3F | 15V |
| 3G | 18V |
| 3H | 24V |
| 3I | 27V |
| 3J | 33V |
| 3K | 48V |

Single output(MS-75) 1 SLOT (75W max.)

| Voltage code | Voltage |
|---|---|
| L | 3.3V |
| M | 5V |
| N | 12V |
| O | 15V |
| P | 24V |
| Q | 48V |

Dual output(MD-100) 1 SLOT (100W max.)

| Voltage code | Voltage |
|---|---|
| R | 5V |
| | 5V |
| S | 5V |
| | 12V |
| T | 5V |
| | 15V |
| U | 24V |
| | 5V |
| V | 24V |
| | 12V |
| W | 12V |
| | 12V |
| X | 15V |
| | 15V |

## SPECIFICATION

| MODEL | | PFC-450 | PFC-650 | PFC-1000 |
|---|---|---|---|---|
| INPUT | VOLTAGE RANGE | 85 ~ 264VAC 120 ~370VDC | | |
| | FREQUENCY RANGE | 47 ~ 63Hz | | |
| | POWER FACTOR | PF>0.95/230VAC PF>0.98/115VAC at full load | | |
| | EFFICIENCY Note.1 | 82.5% typ. | 84% typ. | 84% typ. |
| | AC CURRENT | 6.3A/115VAC 3.2A/230VAC | 9A/115VAC 4.5A/230VAC | 13.5A/115VAC 6.7A/230VAC |
| | INRUSH CURRENT | 25A/115VAC 40A/230VAC | 30A/115VAC 50A/230VAC | 20A/115VAC 40A/230VAC |
| | LEAKAGE CURRENT | <1.5mA/240VAC | | |
| OUTPUT | TOTAL OUTPUT POWER | 450W max. | 650W max. | 1000W max. |
| PROTECTION | OVER TEMPERATURE | Shut down o/p voltage, recovers automatically after temperature goes down | | |
| | FAN ALARM | Output shutdown when FAN is malfunction | | |
| FUNCTION | REMOTE CONTROL | RC+/RC-: 0 ~ 0.8V or Short, Power ON RC+/RC-: 4 ~ 12V or Open, Power OFF | | |
| | AUXILIARY POWER(AUX) | 12V@0.1A(only for Remote ON/OFF Control) | | |
| ENVIRONMENT | WORKING TEMP. | -20 ~ +70℃ (Refer to "Derating Curve") | | |
| | WORKING HUMIDITY | 20 ~ 90% RH non-condensing | | |
| | STORAGE TEMP., HUMIDITY | -40 ~ +85℃, 10 ~ 95% RH non-condensing | | |
| | TEMP. COEFFICIENT | ±0.03%/℃ (0 ~ 50℃) | | |
| | VIBRATION | 10 ~ 500Hz, 2G 10min./1cycle, 60min. each along X, Y, Z axes | | |
| SAFETY & EMC (Note 5) | SAFETY STANDARDS | UL62368-1, TUV BS EN/EN62368-1, EAC TP TC 004 approved | | |
| | WITHSTAND VOLTAGE | I/P-O/P:3KVAC I/P-FG:2KVAC O/P-FG:0.5KVAC | | |
| | ISOLATION RESISTANCE | I/P-O/P, I/P-FG, O/P-FG:100M Ohms / 500VDC / 25℃/ 70% RH | | |
| | EMC EMISSION | Compliance to BS EN/EN55032 (CISPR32) Class B, BS EN/EN61000-3-2,-3, EAC TP TC 020 | | |
| | EMC IMMUNITY | Compliance to BS EN/EN61000-4-2,3,4,5,6,8,11, BS EN/EN55035, BS EN/EN61000-6-1, light industry level, criteria A, EAC TP TC 020 | | |
| OTHERS | MTBF | 2257.3K hrs min. Telcordia SR-332 (Bellcore) ; 225.9K hrs min. MIL-HDBK-217F (25℃) (450W)<br>2135.5K hrs min. Telcordia SR-332 (Bellcore) ; 292K hrs min. MIL-HDBK-217F (25℃) (650W)<br>1793K hrs min. Telcordia SR-332 (Bellcore) ; 239.8K hrs min. MIL-HDBK-217F (25℃) (1000W) | | |
| | DIMENSION | 254*127*63.5mm (L*W*H) | 278*127*63.5mm (L*W*H) | 278*177.8*63.5mm (L*W*H) |
| | PACKING | 1.8Kg(typ.); 6pcs / 11.8Kg / 1.25CUFT | 2.16Kg(typ.); 6pcs / 14Kg / 1.34CUFT | 3Kg(typ.); 6pcs /19Kg / 1.74CUFT |

## SPECIFICATION

### 1 SLOT Single output (150W) MS-150

| | | | | | | | | | | | | |
|---|---|---|---|---|---|---|---|---|---|---|---|---|
| OUTPUT (MS-150) | OUTPUT VOLTAGE CODE | MS-150A | MS-150B | MS-150C | MS-150D | MS-150E | MS-150F | MS-150G | MS-150H | MS-150I | MS-150J | MS-150K |
| | DC VOLTAGE | 2V | 3.3V | 5V | 7.5V | 12V | 15V | 18V | 24V | 27V | 33V | 48V |
| | RATED CURRENT | 25A | 25A | 25A | 18A | 13A | 10A | 8.5A | 6.5A | 5.8A | 4.7A | 3.2A |
| | CURRENT RANGE | 0 ~ 25A | 0 ~ 25A | 0 ~ 25A | 0 ~ 18A | 0 ~ 13A | 0 ~ 10A | 0 ~ 8.5A | 0 ~ 6.5A | 0 ~ 5.8A | 0 ~ 4.7A | 0 ~ 3.2A |
| | PEAK LOAD Note.4 | 30A | 30A | 30A | 20.7A | 15A | 11.5A | 9.8A | 7.5A | 6.7A | 5.4A | 3.68A |
| | RATED POWER | 50W | 82.5W | 125W | 135W | 156W | 150W | 153W | 156W | 156.6W | 155.1W | 153.6W |
| | RIPPLE & NOISE (max.) Note.2 | 50mVp-p | 80mVp-p | 80mVp-p | 100mVp-p | 150mVp-p | 150mVp-p | 150mVp-p | 150mVp-p | 150mVp-p | 250mVp-p | 250mVp-p |
| | VOLTAGE ADJ. RANGE | 1.6 ~ 2.6V | 2.6 ~ 4V | 4 ~ 6V | 6 ~ 9V | 9 ~ 13.2V | 13.2 ~ 16.8V | 16.8 ~ 20V | 20 ~ 26.4V | 25 ~ 31V | 30 ~ 40V | 40 ~ 53V |
| | VOLTAGE TOLERANCE Note.3 | ±3.0% | ±2.0% | ±2.0% | ±2.0% | ±1.0% | ±1.0% | ±1.0% | ±1.0% | ±1.0% | ±1.0% | ±1.0% |
| | LINE REGULATION | ±0.5% | ±0.5% | ±0.5% | ±0.5% | ±0.3% | ±0.3% | ±0.3% | ±0.2% | ±0.2% | ±0.2% | ±0.2% |
| | LOAD REGULATION | ±2.0% | ±1.0% | ±1.0% | ±1.0% | ±0.5% | ±0.5% | ±0.5% | ±0.5% | ±0.5% | ±0.5% | ±0.5% |
| | SETUP, RISE, HOLD UP TIME | 1500ms, 50ms, 20ms at full load | | | | | | | | | | |
| PROTECTION | OVERLOAD | 121 ~ 150% rated output power | | | 116 ~ 150% rated output power | | | | | | | |
| | | Protection type : Constant current limiting, recovers automatically after fault condition is removed | | | | | | | | | | |
| | OVER VOLTAGE | 2.7 ~ 4V | 4.1 ~ 5V | 6.1 ~ 7.5V | 9.1 ~ 11.2V | 13.3 ~ 18V | 16.9 ~ 22V | 20.1 ~ 26V | 26.5 ~ 35V | 31.1 ~ 39V | 40.1 ~ 48V | 53.1 ~ 60V |
| | | Protection type : Shut down o/p voltage, re-power on to recover | | | | | | | | | | |
| FUNCTION | REMOTE INHIBIT CONTROL | RC+/RC-: 0 ~ 0.8V or OPEN, POWER ON RC+/RC-: 4 ~ 12V POWER OFF | | | | | | | | | | |

### 1 SLOT Single output (210W) MS-210

| | | | | | | | | | | | | |
|---|---|---|---|---|---|---|---|---|---|---|---|---|
| OUTPUT (MS-210) | OUTPUT VOLTAGE CODE | MS-210-1A | MS-210-1B | MS-210-1C | MS-210-1D | MS-210-1E | MS-210-1F | MS-210-1G | MS-210-1H | MS-210-1I | MS-210-1J | MS-210-1K |
| | DC VOLTAGE | 2V | 3.3V | 5V | 7.5V | 12V | 15V | 18V | 24V | 27V | 33V | 48V |
| | RATED CURRENT | 35A | 35A | 35A | 28A | 17.5A | 14A | 11.6A | 8.75A | 7.8A | 6.4A | 4.4A |
| | CURRENT RANGE | 0 ~ 35A | 0 ~ 35A | 0 ~ 35A | 0 ~ 28A | 0 ~ 17.5A | 0 ~ 14A | 0 ~ 11.6A | 0 ~ 8.75A | 0 ~ 7.8A | 0 ~ 6.4A | 0 ~ 4.4A |
| | PEAK LOAD Note.4 | 38.5A | 38.5A | 38.5A | 32.2A | 20.1A | 16.1A | 13.4A | 10.1A | 9A | 7.4A | 5.1A |
| | RATED POWER | 70W | 115.5W | 175W | 210W | 210W | 210W | 208.8W | 210W | 210.6W | 211.2W | 211.2W |
| | RIPPLE & NOISE (max.) Note.2 | 50mVp-p | 80mVp-p | 80mVp-p | 100mVp-p | 150mVp-p | 150mVp-p | 150mVp-p | 150mVp-p | 150mVp-p | 250mVp-p | 250mVp-p |
| | VOLTAGE ADJ. RANGE | 1.6 ~ 2.6V | 2.6 ~ 4V | 4 ~ 6V | 6 ~ 9V | 9 ~ 13.2V | 13.2 ~ 16.8V | 16.8 ~ 20V | 20 ~ 26.4V | 25 ~ 31V | 30 ~ 40V | 40 ~ 53V |
| | VOLTAGE TOLERANCE Note.3 | ±3.0% | ±2.0% | ±2.0% | ±2.0% | ±1.0% | ±1.0% | ±1.0% | ±1.0% | ±1.0% | ±1.0% | ±1.0% |
| | LINE REGULATION | ±0.5% | ±0.5% | ±0.5% | ±0.5% | ±0.3% | ±0.3% | ±0.3% | ±0.2% | ±0.2% | ±0.2% | ±0.2% |
| | LOAD REGULATION | ±2.0% | ±1.5% | ±1.0% | ±1.0% | ±0.5% | ±0.5% | ±0.5% | ±0.5% | ±0.5% | ±0.5% | ±0.5% |
| | SETUP, RISE, HOLD UP TIME | 1500ms, 50ms, 20ms at full load | | | | | | | | | | |
| PROTECTION | OVERLOAD | 110 ~ 135% rated output power | | | 116 ~ 150% rated output power | | | | | | | |
| | | Protection type : Constant current limiting, recovers automatically after fault condition is removed | | | | | | | | | | |
| | OVER VOLTAGE | 2.7 ~ 4V | 4.1 ~ 5V | 6.1 ~ 7.5V | 9.1 ~ 11.2V | 13.3 ~ 18V | 16.9 ~ 22V | 20.1 ~ 26V | 26.5 ~ 35V | 31.1 ~ 39V | 40.1 ~ 48V | 53.1 ~ 60V |
| | | Protection type : Shut down o/p voltage, re-power on to recover | | | | | | | | | | |
| FUNCTION | REMOTE INHIBIT CONTROL | RC+/RC-: 0 ~ 0.8V or OPEN, POWER ON RC+/RC-: 4 ~ 12V POWER OFF | | | | | | | | | | |

### 2 SLOT Single output (300W) MS-300

| | | | | | | | | | | | | |
|---|---|---|---|---|---|---|---|---|---|---|---|---|
| OUTPUT (MS-300) | OUTPUT VOLTAGE CODE | MS-300-2A | MS-300-2B | MS-300-2C | MS-300-2D | MS-300-2E | MS-300-2F | MS-300-2G | MS-300-2H | MS-300-2I | MS-300-2J | MS-300-2K |
| | DC VOLTAGE | 2V | 3.3V | 5V | 7.5V | 12V | 15V | 18V | 24V | 27V | 33V | 48V |
| | RATED CURRENT | 50A | 50A | 50A | 40A | 25A | 20A | 16.7A | 12.5A | 11.2A | 9.1A | 6.3A |
| | CURRENT RANGE | 0 ~ 50A | 0 ~ 50A | 0 ~ 50A | 0 ~ 40A | 0 ~ 25A | 0 ~ 20A | 0 ~ 16.7A | 0 ~ 12.5A | 0 ~ 11.2A | 0 ~ 9.1A | 0 ~ 6.3A |
| | PEAK LOAD Note.4 | 57.5A | 57.5A | 57.5A | 46A | 29A | 23A | 19.2A | 14.4A | 12.9A | 10.5A | 7.2A |
| | RATED POWER | 100W | 165W | 250W | 300W | 300W | 300W | 300.6W | 300W | 302.4W | 300.3W | 302.4W |
| | RIPPLE & NOISE (max.) Note.2 | 80mVp-p | 80mVp-p | 80mVp-p | 100mVp-p | 150mVp-p | 150mVp-p | 150mVp-p | 150mVp-p | 200mVp-p | 250mVp-p | 300mVp-p |
| | VOLTAGE ADJ. RANGE | 1.6 ~ 2.6V | 2.6 ~ 4V | 4 ~ 6V | 6 ~ 9V | 9 ~ 13.2V | 13.2 ~ 16.8V | 16.8 ~ 20V | 20 ~ 26.4V | 25 ~ 31V | 30 ~ 40V | 40 ~ 53V |
| | VOLTAGE TOLERANCE Note.3 | ±3.0% | ±2.0% | ±2.0% | ±2.0% | ±1.0% | ±1.0% | ±1.0% | ±1.0% | ±1.0% | ±1.0% | ±1.0% |
| | LINE REGULATION | ±0.5% | ±0.5% | ±0.5% | ±0.5% | ±0.3% | ±0.3% | ±0.3% | ±0.2% | ±0.2% | ±0.2% | ±0.2% |
| | LOAD REGULATION | ±2.0% | ±1.0% | ±1.0% | ±1.0% | ±0.5% | ±0.5% | ±0.5% | ±1.0% | ±1.0% | ±1.0% | ±1.0% |
| | SETUP, RISE, HOLD UP TIME | 1500ms, 50ms, 20ms at full load | | | | | | | | | | |
| PROTECTION | OVERLOAD | 116 ~ 150% rated output power | | | | | | | | | | |
| | | Protection type : Constant current limiting, recovers automatically after fault condition is removed | | | | | | | | | | |
| | OVER VOLTAGE | 3 ~ 4V | 4.1 ~ 5V | 6.1 ~ 7.5V | 9.1 ~ 11.2V | 13.3 ~ 18V | 16.9 ~ 22V | 20.1 ~ 26V | 26.5 ~ 35V | 31.1 ~ 39V | 40.1 ~ 48V | 53.1 ~ 60V |
| | | Protection type : Shut down o/p voltage, re-power on to recover | | | | | | | | | | |
| FUNCTION | REMOTE INHIBIT CONTROL | RC+/RC-: 0 ~ 0.8V or OPEN, POWER ON RC+/RC-: 4 ~ 12V POWER OFF | | | | | | | | | | |

### 2 SLOT Single output (360W) MS-360

| | | | | | | | | | | | | |
|---|---|---|---|---|---|---|---|---|---|---|---|---|
| OUTPUT (MS-360) | OUTPUT VOLTAGE CODE | MS-360-3A | MS-360-3B | MS-360-3C | MS-360-3D | MS-360-3E | MS-360-3F | MS-360-3G | MS-360-3H | MS-360-3I | MS-360-3J | MS-360-3K |
| | DC VOLTAGE | 2V | 3.3V | 5V | 7.5V | 12V | 15V | 18V | 24V | 27V | 33V | 48V |
| | RATED CURRENT | 60A | 60A | 60A | 48A | 30A | 24A | 20A | 15A | 13.4A | 11A | 7.5A |
| | CURRENT RANGE | 0 ~ 60A | 0 ~ 60A | 0 ~ 60A | 0 ~ 48A | 0 ~ 30A | 0 ~ 24A | 0 ~ 20A | 0 ~ 15A | 0 ~ 13.4A | 0 ~ 11A | 0 ~ 7.5A |
| | PEAK LOAD Note.4 | 69A | 69A | 69A | 55.2A | 34.5A | 27.6A | 23A | 17.3A | 15.5A | 12.7A | 8.7A |
| | RATED POWER | 120W | 198W | 300W | 360W | 360W | 360W | 360W | 360W | 361.8W | 363W | 360W |
| | RIPPLE & NOISE (max.) Note.2 | 80mVp-p | 100mVp-p | 100mVp-p | 100mVp-p | 150mVp-p | 150mVp-p | 150mVp-p | 150mVp-p | 200mVp-p | 250mVp-p | 300mVp-p |
| | VOLTAGE ADJ. RANGE | 1.6 ~ 2.6V | 2.6 ~ 4V | 4 ~ 6V | 6 ~ 9V | 9 ~ 13.2V | 13.2 ~ 16.8V | 16.8 ~ 20V | 20 ~ 26.4V | 25 ~ 31V | 30 ~ 40V | 40 ~ 53V |
| | VOLTAGE TOLERANCE Note.3 | ±3.0% | ±2.0% | ±2.0% | ±2.0% | ±1.0% | ±1.0% | ±1.0% | ±1.0% | ±1.0% | ±1.0% | ±1.0% |
| | LINE REGULATION | ±0.5% | ±0.5% | ±0.5% | ±0.5% | ±0.3% | ±0.3% | ±0.3% | ±0.2% | ±0.2% | ±0.2% | ±0.2% |
| | LOAD REGULATION | ±2.0% | ±1.5% | ±1.0% | ±1.0% | ±0.5% | ±0.5% | ±0.5% | ±1.0% | ±1.0% | ±1.0% | ±1.0% |
| | SETUP, RISE, HOLD UP TIME | 1500ms, 50ms, 20ms at full load | | | | | | | | | | |
| PROTECTION | OVERLOAD | 116 ~ 150% rated output power | | | | | | | | | | |
| | | Protection type : Constant current limiting, recovers automatically after fault condition is removed | | | | | | | | | | |
| | OVER VOLTAGE | 3 ~ 4V | 4.1 ~ 5V | 6.1 ~ 7.5V | 9.1 ~ 11.2V | 13.3 ~ 18V | 16.9 ~ 22V | 20.1 ~ 26V | 26.5 ~ 35V | 31.1 ~ 39V | 40.1 ~ 48V | 53.1 ~ 60V |
| | | Protection type : Shut down o/p voltage, re-power on to recover | | | | | | | | | | |
| FUNCTION | REMOTE INHIBIT CONTROL | RC+/RC-: 0 ~ 0.8V or OPEN, POWER ON RC+/RC-: 4 ~ 12V POWER OFF | | | | | | | | | | |

## SPECIFICATION

■ 1 SLOT Single output (75W) MS-75

| | | | | | | | |
|---|---|---|---|---|---|---|---|
| OUTPUT (MS-75) | OUTPUT VOLTAGE CODE | MS-75L | MS-75M | MS-75N | MS-75O | MS-75P | MS-75Q |
| | DC VOLTAGE | 3.3V | 5V | 12V | 15V | 24V | 48V |
| | RATED CURRENT | 15A | 15A | 6.3A | 5A | 3.2A | 1.6A |
| | CURRENT RANGE | 0 ~ 15A | 0 ~ 15A | 0 ~ 6.3A | 0 ~ 5A | 0 ~ 3.2A | 0 ~ 1.6A |
| | PEAK LOAD Note.4 | 17.3A | 17.3A | 7.3A | 5.8A | 3.7A | 1.8A |
| | RATED POWER | 49.5W | 75W | 75.6W | 75W | 76.8W | 76.8W |
| | RIPPLE & NOISE (max.) Note.2 | 80mVp-p | 80mVp-p | 150mVp-p | 150mVp-p | 150mVp-p | 250mVp-p |
| | VOLTAGE ADJ. RANGE | 2.6 ~ 4V | 4 ~ 6V | 9 ~ 13.2V | 13.2 ~ 16.8V | 20 ~ 26.4V | 40 ~ 53V |
| | VOLTAGE TOLERANCE Note.3 | ±2.0% | ±2.0% | ±1.0% | ±1.0% | ±1.0% | ±1.0% |
| | LINE REGULATION | ±0.5% | ±0.5% | ±0.3% | ±0.3% | ±0.2% | ±0.2% |
| | LOAD REGULATION | ±1.0% | ±1.0% | ±0.5% | ±0.5% | ±0.5% | ±0.5% |
| | SETUP, RISE, HOLD UP TIME | 1500ms, 50ms, 20ms at full load | | | | | |
| PROTECTION | OVERLOAD | 116 ~ 150% rated output power | | | | | |
| | | Protection type : Constant current limiting, recovers automatically after fault condition is removed | | | | | |
| | OVER VOLTAGE | 4.1 ~ 5V | 6.1 ~ 7.5V | 13.3 ~ 18V | 16.9 ~ 22V | 26.5 ~ 35V | 53.1 ~ 60V |
| | | Protection type : Shut down o/p voltage, re-power on to recover | | | | | |
| FUNCTION | REMOTE INHIBIT CONTROL | RC+/RC-: 0 ~ 0.8V or OPEN, POWER ON RC+/RC-: 4 ~ 12V POWER OFF | | | | | |

■ 1 SLOT Isolated Dual output (100W) MD-100

| | | | | | | | | | | | | | | | |
|---|---|---|---|---|---|---|---|---|---|---|---|---|---|---|---|
| OUTPUT (MD-100) | OUTPUT VOLTAGE CODE | MD-100R | | MD-100S | | MD-100T | | MD-100U | | MD-100V | | MD-100W | | MD-100X | |
| | DC VOLTAGE | 5V | 5V | 5V | 12V | 5V | 15V | 24V | 5V | 24V | 12V | 12V | 12V | 15V | 15V |
| | RATED CURRENT | 10A | 8A | 10A | 4.2A | 10A | 3.4A | 2.5A | 8A | 2.5A | 3.4A | 5A | 3.4A | 4A | 2.7A |
| | CURRENT RANGE | 2 ~ 10A | 0 ~ 8A | 2 ~ 10A | 0 ~ 5.8A | 2 ~ 10A | 0 ~ 4.7A | 0.5 ~ 3A | 0 ~ 10A | 0.6 ~ 3A | 0 ~ 4.7A | 1 ~ 5A | 0 ~ 5.8A | 1 ~ 4.7A | 0 ~ 4.7A |
| | RATED POWER Note.6 | 90W | | 100.4W | | 101W | | 100W | | 100.8W | | 100.8W | | 100.5W | |
| | RIPPLE & NOISE (max.) Note.2 | 100mVp-p | 100mVp-p | 100mVp-p | 150mVp-p | 100mVp-p | 150mVp-p | 200mVp-p | 100mVp-p | 240mVp-p | 120mVp-p | 120mVp-p | 120mVp-p | 150mVp-p | 150mVp-p |
| | VOLTAGE ADJ. RANGE | 4.75 ~ 5.5V | 4.75 ~ 5.5V | 4.75 ~ 5.5V | 11.4 ~ 13.2V | 4.75 ~ 5.5V | 14.2 ~ 16.5V | 22.8 ~ 26.4V | 4.75 ~ 5.5V | 22.8 ~ 26.4V | 11.4 ~ 13.2V | 11.4 ~ 13.2V | 11.4 ~ 13.2V | 14.2 ~ 16.5V | 14.2 ~ 16.5V |
| | VOLTAGE TOLERANCE Note.3 | ±3.0% | ±3.0% | ±3.0% | ±3.0% | ±3.0% | ±3.0% | ±3.0% | ±3.0% | ±2.0% | ±3.0% | ±2.0% | ±3.0% | ±2.0% | ±3.0% |
| | LINE REGULATION | ±1.0% | ±1.0% | ±1.0% | ±1.0% | ±1.0% | ±1.0% | ±1.0% | ±1.0% | ±0.5% | ±1.0% | ±0.5% | ±1.0% | ±0.5% | ±1.0% |
| | LOAD REGULATION | ±2.0% | ±2.0% | ±2.0% | ±2.0% | ±2.0% | ±2.0% | ±2.0% | ±2.0% | ±1.0% | ±2.0% | ±1.0% | ±2.0% | ±1.0% | ±2.0% |
| | SETUP, RISE, HOLD UP TIME | 1500ms, 50ms, 20ms at full load | | | | | | | | | | | | | |
| PROTECTION | OVERLOAD | 105 ~ 150% rated output power | | | | | | | | | | | | | |
| | | Protection type : Shut down o/p voltage, re-power on to recover | | | | | | | | | | | | | |
| | OVER VOLTAGE | 5.6 ~ 7.2V | 5.6 ~ 7.2V | 5.6 ~ 7.2V | 13.3 ~ 17V | 5.6 ~ 7.2V | 16.6 ~ 22V | 26.5 ~ 34V | 5.6 ~ 7.2V | 26.5 ~ 34V | 13.3 ~ 17V | 13.3 ~ 17V | 13.3 ~ 17V | 16.6 ~ 22V | 16.6 ~ 22V |
| | | Protection type : Shut down o/p voltage, re-power on to recover | | | | | | | | | | | | | |
| FUNCTION | REMOTE INHIBIT CONTROL | RC+/RC-: 0 ~ 0.8V or OPEN, POWER ON RC+/RC-: 4 ~ 12V POWER OFF | | | | | | | | | | | | | |

NOTE

1. MP450:The value changed by installing different output modules. The efficiency in specification means output modules are composed by following modules.
   5V(Voltage code C)*1, 12V(Voltage code E)*1, 24V(Voltage code H)*1, 5V(Voltage code M)*1.
   MP650:The value changed by installing different output modules. The efficiency in specification means output modules are composed by following modules.
   5V(Voltage code C)*2, 12V(Voltage code E)*1, 24V(Voltage code H)*2.
   MP1K0:The value changed by installing different output modules. The efficiency in specification means output modules are composed by following modules.
   5V(Voltage code C)*2, 12V(Voltage code E)*2, 24V(Voltage code H)*3.
   The hold-up time of above combination is 20ms(typ.)
2. Ripple & noise are measured at 20MHz of bandwidth by using a 12" twisted pair-wire terminated with a 0.1uf & 47uf parallel capacitor.
3. Tolerance : includes set up tolerance, line regulation and load regulation.
4. 35% Duty cycle maximum within every 10 seconds. Average output power should not exceed the rated power.
5. The power supply is considered a component which will be installed into a final equipment. All the EMC tests are been executed by mounting the unit on a 720mm*360mm metal plate with 1mm of thickness. The final equipment must be re-confirmed that it still meets EMC directives. For guidance on how to perform these EMC tests, please refer to "EMI testing of component power supplies."
   (as available on https://www.meanwell.com//Upload/PDF/EMI_statement_en.pdf)
6. If the output voltage adjust to higher level, the rated current should be derated to meet the total rated power for both outputs(For MD-100 only).
7. The ambient temperature derating of 3.5℃/1000m with fanless models and of 5℃/1000m with fan models for operating altitude higher than 2000m(6500ft).

※ Product Liability Disclaimer : For detailed information, please refer to https://www.meanwell.com/serviceDisclaimer.aspx

### Table 1. Parallel code(For MS-210、MS-300、MS-360 only)

| Model | Code | SLOT1 | SLOT2 | SLOT3 | SLOT4 | SLOT5 | SLOT6 | SLOT7 |
|---|---|---|---|---|---|---|---|---|
| MS-300/360 | X | | | | | | ----- | ----- |
| | 1 | ○ | ——— | ○ | | | ----- | ----- |
| | 2 | | ○ | ——— | ○ | | ----- | ----- |
| | 3 | | | ○ | ——— | ○ | | |
| | 4 | | | | ○ | ——— | ○ | |
| | 5 | ○ | ——— | ○ | ——— | ○ | | |
| | 6 | | ○ | ——— | ○ | ——— | ○ | |
| MS-210 | 7 | ○ | ——— | ○ | | | | |
| | 8 | ○ | ——— | ○ | ——— | ○ | | |
| | 9 | ○ | ——— | ○ | ——— | ○ | | |

※Code X,1,2,7,8,9 for MP450, MP650
※Code X,1,2,3,4,5,6,7,8,9 for MP1K0
※Maximum number of units for parallel function : 5 for MS-210, 3 for MS-300/360

## ■ Mechanical Specification

(Unit: mm , tolerance ±0.5mm)

Case No.939A

### MP450

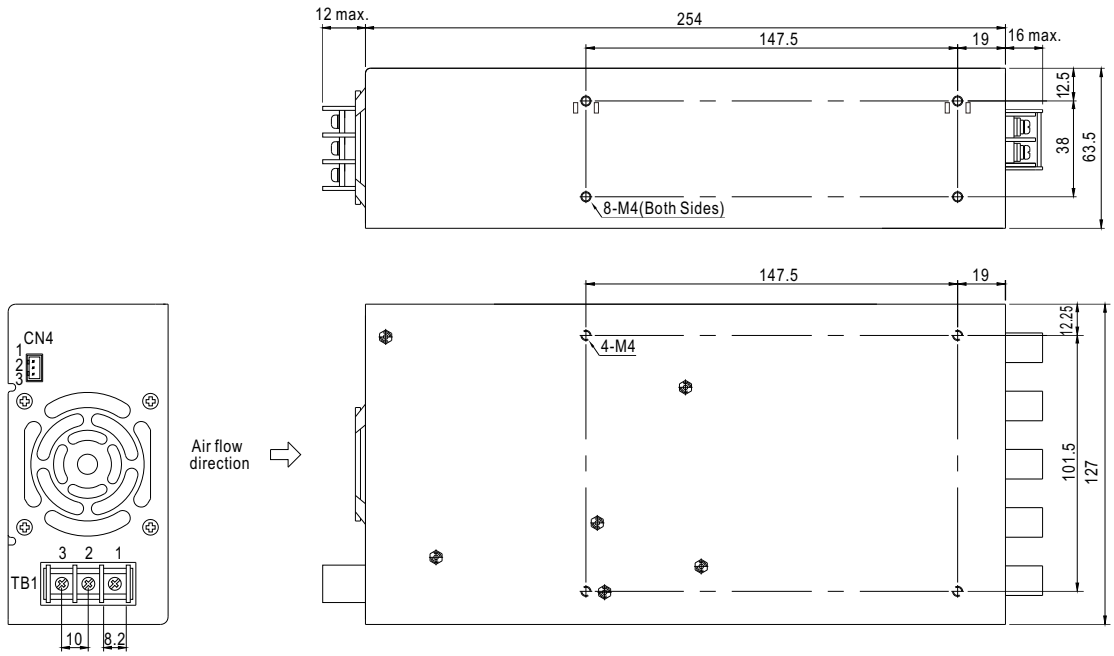


Case No.935A

### MP650

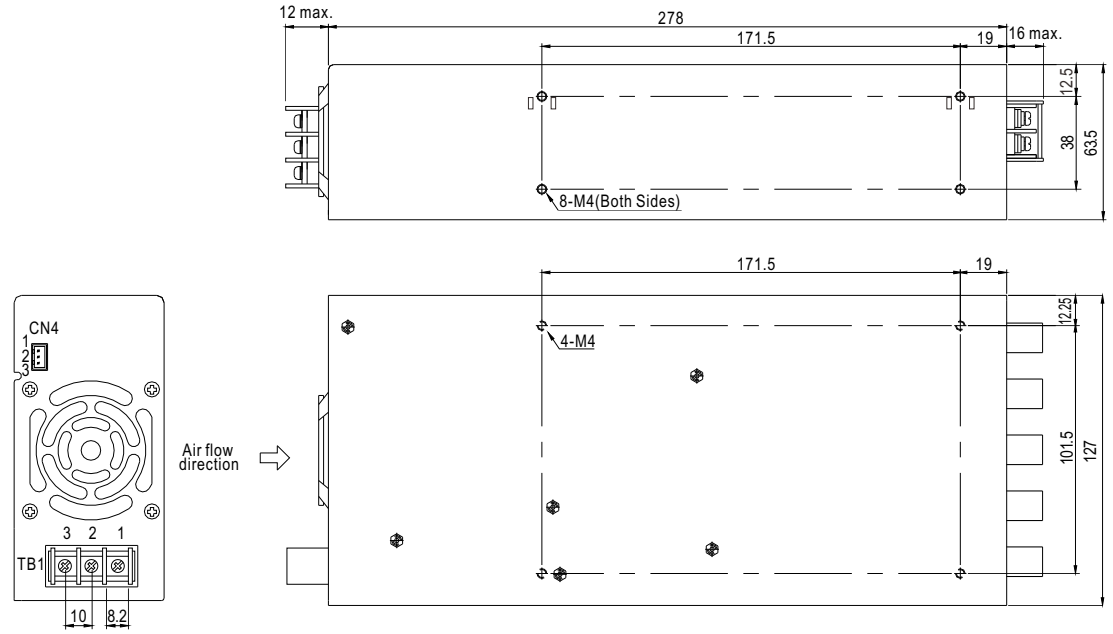

Case No.940A

**MP1K0**

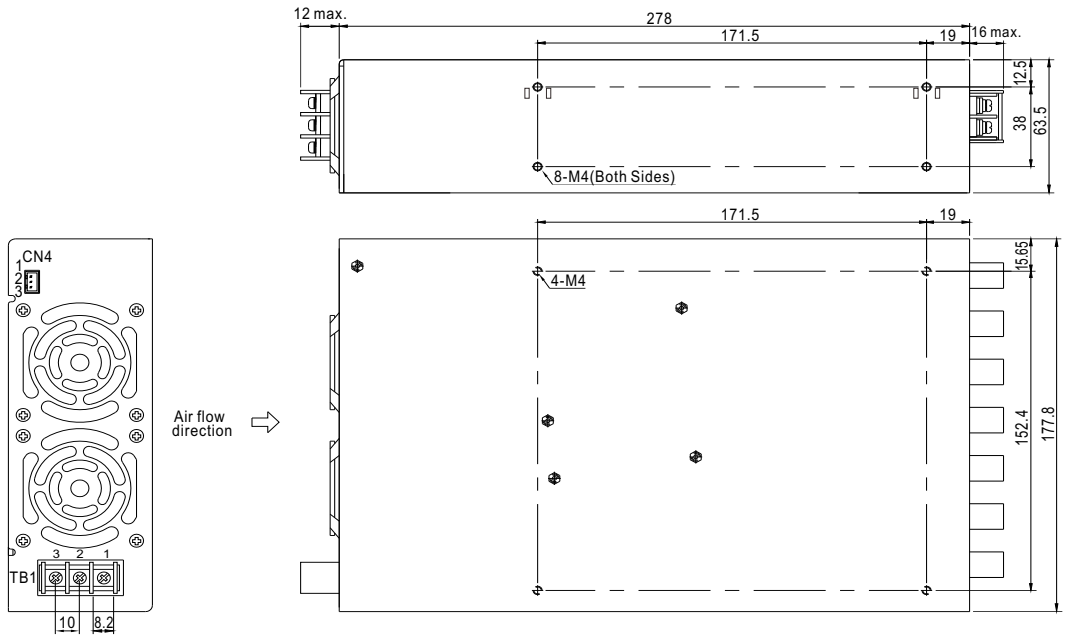


TB1(PFC-450/650/1K0)

| Pin No. | Assignment | Screw Size | Maximum mounting torque |
|---|---|---|---|
| 1 | AC/L | M3.5 | 18Kgf-cm |
| 2 | AC/N | | |
| 3 | FG ⏚ | | |

CN4(PFC-450/650/1K0) : JST B3B-XH or equivalent

| Pin No. | Assignment | Mating Housing | Terminal |
|---|---|---|---|
| 1 | +RC: +Remote ON/OFF | JST XHP or equivalent | JST SXH-001T-P0.6 or equivalent |
| 2 | -RC: -Remote ON/OFF | | |
| 3 | VCC: 12V/0.1A auxiliary output | | |

## ■ Mechanism of Output Modules

Unit:mm

◎MS-75

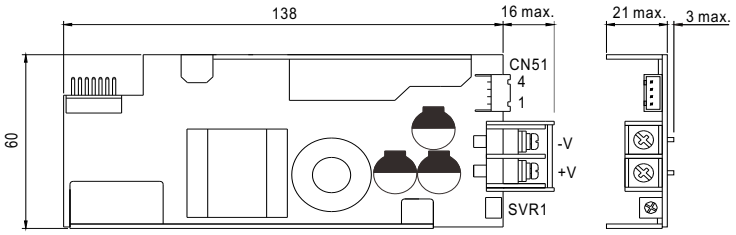


Output Connector(CN51) : JST B4B-XH or equivalent

| Pin No. | Assignment | Mating Housing | Terminal |
|---|---|---|---|
| 1 | +S: +Remote sense | JST XHP or equivalent | JST SXH-001T-P0.6 or equivalent |
| 2 | -S: -Remote sense | | |
| 3 | +RC: +Remote ON/OFF | | |
| 4 | -RC: -Remote ON/OFF | | |

| Assignment | Screw Size | Maximum mounting torque |
|---|---|---|
| +V,-V | M4 | 18Kgf-cm |

◎MS-150

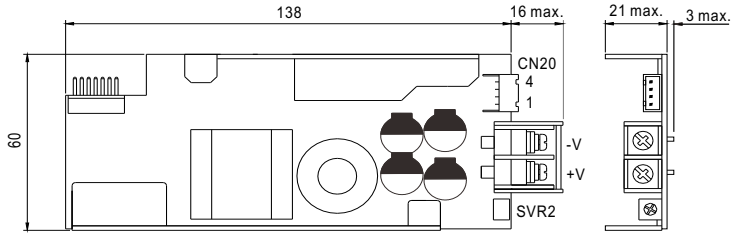


Output Connector(CN20) : JST B4B-XH or equivalent

| Pin No. | Assignment | Mating Housing | Terminal |
|---|---|---|---|
| 1 | +S: +Remote sense | JST XHP or equivalent | JST SXH-001T-P0.6 or equivalent |
| 2 | -S: -Remote sense | | |
| 3 | +RC: +Remote ON/OFF | | |
| 4 | -RC: -Remote ON/OFF | | |

| Assignment | Screw Size | Maximum mounting torque |
|---|---|---|
| +V,-V | M4 | 18Kgf-cm |

## ■ Mechanism of Output Modules

◎MS-210

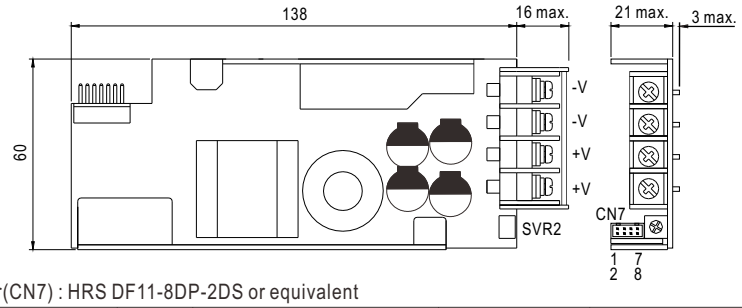


Output Connector(CN7) : HRS DF11-8DP-2DS or equivalent

| Pin No. | Assignment | Pin No. | Assignment | Mating Housing | Terminal |
|---|---|---|---|---|---|
| 1 | +S: +Remote sense | 5 | CS: Current sharing | HRS DF11-8DS or equivalent | DRS DF11-**SC or equivalent |
| 2 | -S: -Remote sense | 6 | G: GND | | |
| 3 | +RC: +Remote ON/OFF | 7 | ML: Remote margin low control | | |
| 4 | -RC: -Remote ON/OFF | 8 | M: Remote margin control | | |

| Assignment | Screw Size | Maximum mounting torque |
|---|---|---|
| +V,-V | M3.5 | 12Kgf-cm |

NOTE: 1.The voltage difference among each output should be minimized that less than 2% is required.
2.The total output current must not exceed the value determined by the following equation.
(Output current at parallel operation) = (The rated current per unit)×(Number of unit)×0.9

◎MS-300

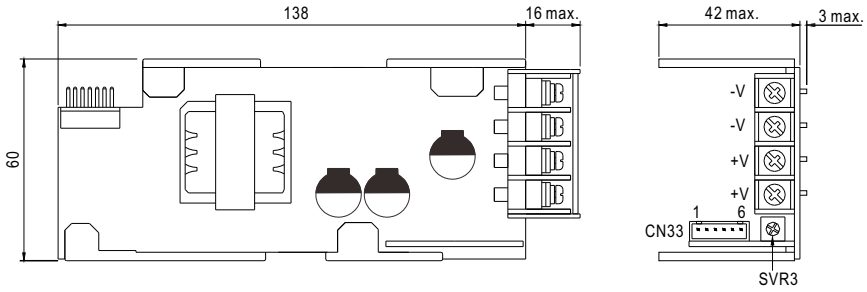


Output Connector(CN33) : JST B6B-XH or equivalent

| Pin No. | Assignment | Mating Housing | Terminal |
|---|---|---|---|
| 1 | +S: +Remote sense | JST XHP or equivalent | JST SXH-001T-P0.6 or equivalent |
| 2 | -S: -Remote sense | | |
| 3 | +RC: +Remote ON/OFF | | |
| 4 | -RC: -Remote ON/OFF | | |
| 5 | CS:Current sharing | | |
| 6 | G:GND | | |

| Assignment | Screw Size | Maximum mounting torque |
|---|---|---|
| +V,-V | M4 | 18Kgf-cm |

NOTE: 1.The voltage difference among each output should be minimized that less than 2% is required.
2.The total output current must not exceed the value determined by the following equation.
(Output current at parallel operation) = (The rated current per unit)×(Number of unit)×0.9

◎MS-360

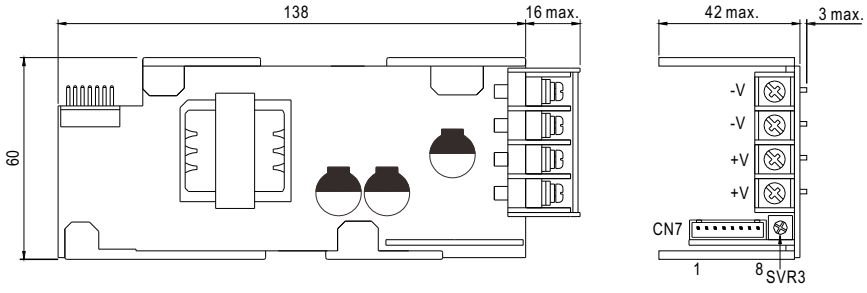


Output Connector(CN7) : JST B8B-XH or equivalent

| Pin No. | Assignment | Pin No. | Assignment | Mating Housing | Terminal |
|---|---|---|---|---|---|
| 1 | +S: +Remote sense | 5 | CS: Current sharing | JST XHP or equivalent | JST SXH-001T-P0.6 or equivalent |
| 2 | -S: -Remote sense | 6 | G: GND | | |
| 3 | +RC: +Remote ON/OFF | 7 | ML: Remote margin low control | | |
| 4 | -RC: -Remote ON/OFF | 8 | M: Remote margin control | | |

| Assignment | Screw Size | Maximum mounting torque |
|---|---|---|
| +V,-V | M3.5 | 12Kgf-cm |

NOTE: 1.The voltage difference among each output should be minimized that less than 2% is required.
2.The total output current must not exceed the value determined by the following equation.
(Output current at parallel operation) = (The rated current per unit)×(Number of unit)×0.9

## ■ Mechanism of Output Modules

◎MD-100

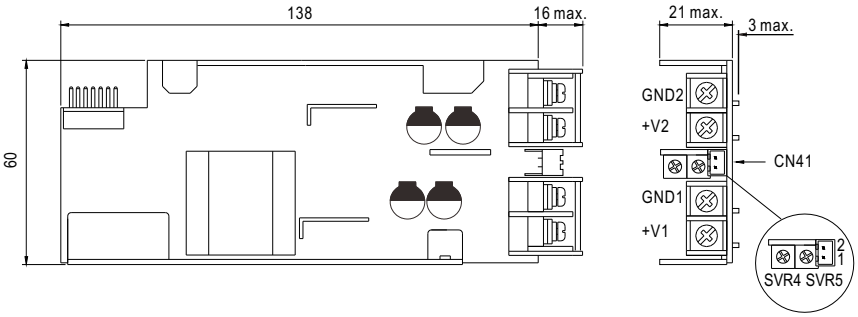


Output Connector(CN41) : JST B2B-ZR or equivalent

| Pin No. | Assignment | Mating Housing | Terminal |
|---|---|---|---|
| 1 | +RC | JST ZHR-2 or equivalent | JST SZH-002T-P0.5 or equivalent |
| 2 | -RC | | |

| Assignment | Screw Size | Maximum mounting torque |
|---|---|---|
| +V,-V | M4 | 18Kgf-cm |

NOTE: 1.Remote ON/OFF of CN4 turn ON/OFF the entire power system
2.Remote ON/OFF of CN20,CN33,CN41,CN51 turn ON/OFF the individual output module
3.SVR1~5: DC output voltage adjustment(SVR4 for CH2 of MD-100,SVR5 for CH1 of MD-100)

## ■ Derating Curve

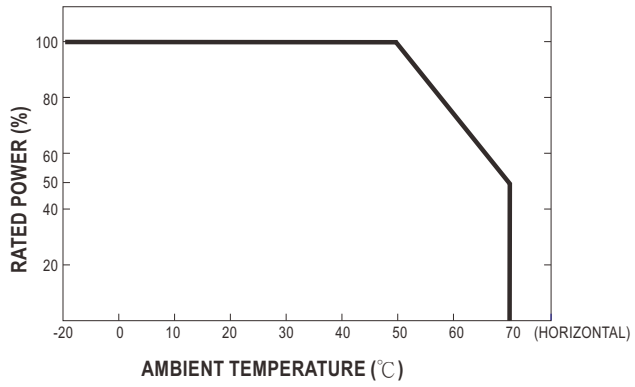


## ■ Static Characteristics

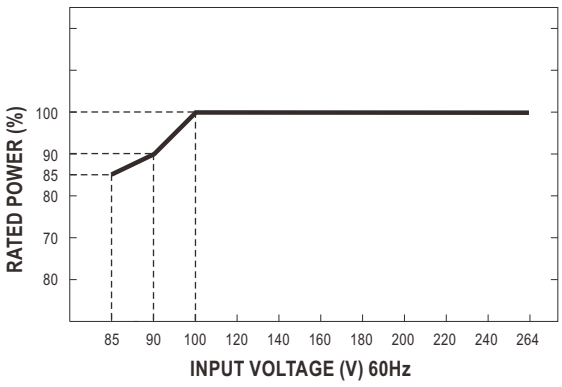


## ■ Remote Margin / V-Program

Remote Margin / V-Program is available for MS-210 and MS-360 to fine tune the output voltage. Hereunder is the instruction, assuming no voltage adjustment is applied via the built-in potentiometer.

(1)When the function is not required, please have pin CN7-8 (refer to Mechanism of Output Modules) open, and the output voltage will present the nominal voltage.

(2)Connecting pin CN7-8 with CN7-6 (or CN7-7) will tune the output voltage up (if CN7-7, down) by 5% of the nominal voltage.

(3)Appling an additional 100KΩ potentiometer across CN7-6 and CN7-7 (referring to Figure 1) will enable the adjustment in between -5% and +5% (EX: -3%, +2.5%, and etc.)

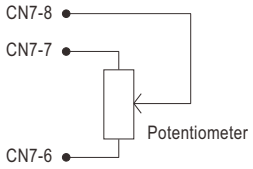


Figure 1

(Please refer to Mechanism of Output Modules)